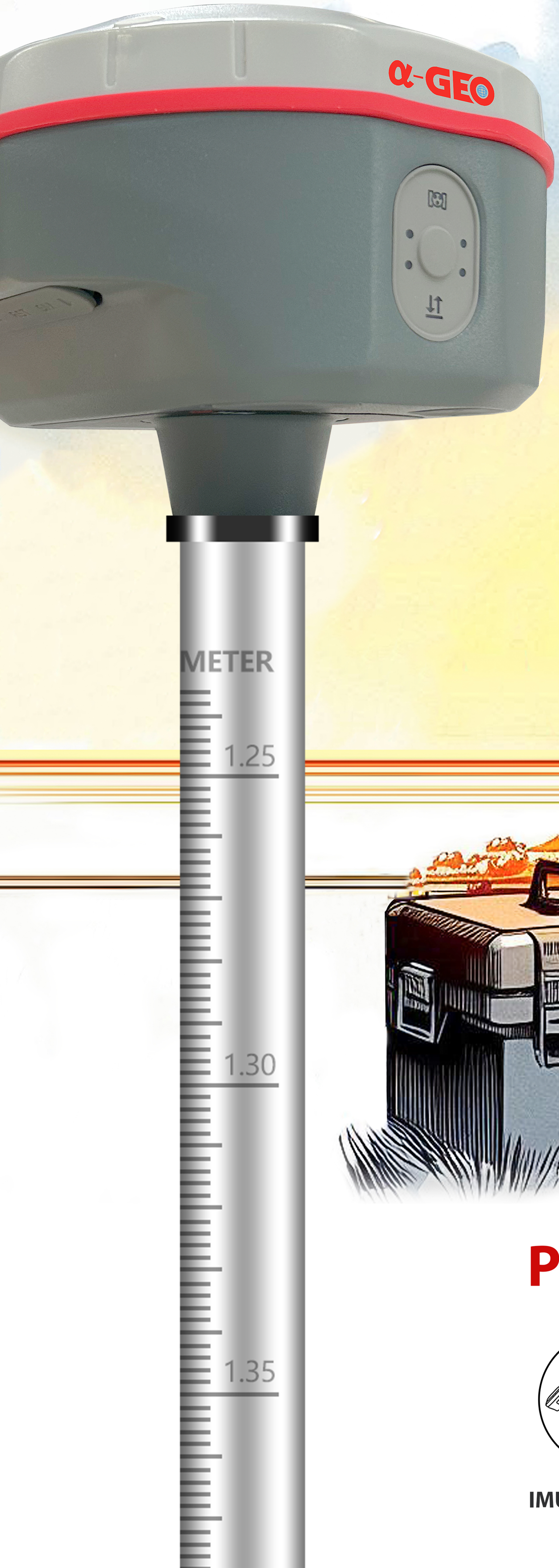

α-GEO

Matrix II Lite

PRECISE you can trust

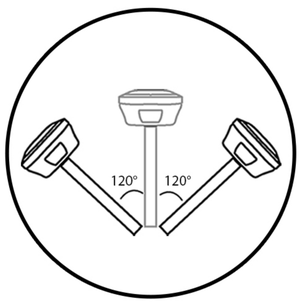

IMU Tilt Sensor

Battery & Power

IP67

Matrix II Lite PRECISE

Product Introduction

Matrix II Lite is a new generation of compact smart GNSS receivers designed for various surveying projects using latest GNSS features. This receiver equipped with modern required technologies such as Bluetooth module, IMU tilt sensor, 7000mAh lithium-ion internal battery, etc. **Matrix II Lite** is able to work in different work modes (Network RTK, Static & PPK) based on different required accuracy & conditions. **Matrix II Lite** is the most economic GNSS package you can purchase to fulfill your technical needs on field!

IMU Tilt Sensor

Matrix II Lite is equipped with a fast initialization, calibration free & immune to magnetic interference Inertial Measurement Unit (IMU). All users can use this technology to collect or stakeout topo points up to 120°.

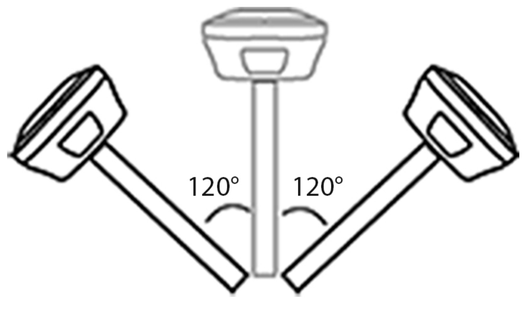

Battery & Power

Matrix II Lite is delivered with an internal large capacity 7000mAh lithium-ion battery supporting USB type-C fast charging which allows users to work for more than 24 hours in daily field work.

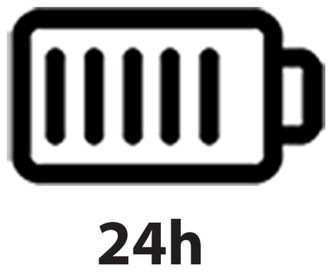

IP67

Choosing a small, light but professional, reugged GNSS receiver has always been a concern among professional surveyors. **Matrix II Lite** with its high quality magnesium alloy body provides such advantages without decreasing quality or notable increase in price.

specification

Performance specification	
Satellite signals tracked simultaneously	GPS: L1 C/A, L2C, L2P, L5 GLONASS: L1, L2, L3 BEIDOU: B1, B2, B3, B1C, B2a, B2b GALILEO: El/E5a/E5b/E6 QZSS: L1/L2/L5/L6 SBAS: WAAS, EGNOS, MSAS, GAGAN, SDCM L-band: PPP, GALILEO-HAS
Channels	1408
Cold start	<60 s
Hot start	<15 s
Positioning output rate	1Hz–20Hz
Signal Reacquisition	<1s
RTK Initialization time	<5s
Initialization Reliability	>99.99%
Time accuracy	20 ns
Positioning[1]	
Static GNSS surveying	Horizontal: ±(2.5mm + 0.5ppm) Vertical: ±(5mm + 0.5ppm)
RTK Surveying	Horizontal: ±(8mm + 1.0ppm) Vertical: ±(15mm + 1.0ppm)
HARDWARE	
PHYSICAL	
Material	Magnesium alloy
Dimensions	120mm*72mm(without bottom connector 20mm)
weight	0.76kg
Operating temperature	-40°C to + 75°C
Storage temperature	-55°C to + 85°C
Protection IP	IP67 dust proof, protected from 30min immersion to depth of 1m
Shock	Survive 2 m drop onto the concrete
Vibration	MIL-STD-810G
Humidity	100%, condensing
IMU	
IMU	Supported, 4D IMU initialization in 3 seconds
IMU update rate	400Hz
IMU accuracy	＜2.5cm within 30°
IMU tilt compensation	0-120°
ELECTRICAL	
Power	9~24 V DC external power
USB Type-C fast charging	Support
Battery capacity	Internal 7000mAh lithium-ion battery
Working Time	
Network Mode	>24h
Radio Reception	>18h
Radio Transmission	>8h
Communication & Data Storage	
I/O interface	5pin Lemo port, TNC port
RADIO MODEM	
internal radio	TX/RX internal module
internal radio frenquency	410-470 MHZ
Communication protocols	Alphatalk15, Transparent transmission /TT450S/SOUTH
Cellular	
Integrated full frequency multi band 4G modem, supports WCDMA/CDMA2000/TDD-LTE/FDD-LTE	
Bluetooth	
Fully integrated Bluetooth V4.0, range ≤ 50m	
Data format	
Differential data	RTCM2.X、RTCM3.X
GPS output data format	NMEA 0183s RTK, Binary code
static data format	RINEX
Storage	
8GB internal memory, supports cyclic storage; with ability to collect over one year raw observation based on 5 seconds interval	
Others	
System integration	
OS system	Intelligent LINUX operating system
Supported controllers	All android devices with supported software
Design	
Key	one button
Indicator	Power indicator, data link indicator, satellite indicator, Bluetooth indicator